Work Order ID 71583

Wednesday, July 06, 2011 1:25:10 PM

Item ID: D3405-041 **Accept** **Setup Start**

Revision ID: **Stop**

Item Name: Lug Assembly

Start Date: 7/6/2011 **Start Qty:** 8.00 **Cust Item ID:**

Required Date: 7/20/2011 **Req'd Qty:** 8.00 **Customer:**

Reference:

Run Start / **Stop**

Approvals: **Process Plan:** CL **Date:** 11/07/06 **Tooling:** _____ **Date:** _____

QC: _____ **Date:** _____ **SPC (Y/N):** _____ **Date:** _____

Sequence ID/ Work Center ID	Operation Description	Set Up/ Run Hours	Tool ID	Tool #	Plan Code	Accept Qty	Reject Qty	Reject Number	Insp. Stamp
Draw Nbr / **Revision Nbr**									
D3405 / Rev B									
100	FLOW WATER JET	0.00							
Waterjet	**Memo**	0.00				B11-7-13			
FLOW CNC Waterjet	1-Cut as per Dwg D3405 Dwg Rev: B Prog Rev: B 2-Deburr if necessary								
304.128								9	
110	QC2- Inspect parts off machine FAI/FAIB	0.00							
QC	**Memo**	0.00				B11-7-13			
Quality Control									
120	QC8- Inspect parts - second check	0.00							
QC	**Memo**	0.00				K8			
Quality Control									

8 w/07/13

Dart Aerospace Ltd

W/O:		WORK ORDER CHANGES					
DATE	STEP	PROCEDURE CHANGE	By	Date	Qty	Approval Chief Eng / Prod Mgr	Approval QC Inspector

Part No: _____ **PAR #:** _____ **Fault Category:** _____ **NCR:** Yes No **DQA:** _____ **Date:** _____

Resolution: _____ **Disposition:** _____ **QA: N/C Closed:** _____ **Date:** _____

NCR:		WORK ORDER NON-CONFORMANCE (NCR)						
DATE	STEP	Description of NC Section A	Corrective Action Section B			Verification Section C	Approval Chief Eng	Approval QC Inspector
			Initial Chief Eng	Action Description Chief Eng	Sign & Date			

NOTE: Date & initial all entries

H:\fFORMS\Quality Assurance\approved QA\NCRWO RevE

Work Order ID 71583

Wednesday, July 06, 2011 1:25:10 PM

Item ID: D3405-041 **Accept** **Setup Start**

Revision ID: **Stop**

Item Name: Lug Assembly

Start Date: 7/6/2011 **Start Qty:** 8.00 **Cust Item ID:**

Required Date: 7/20/2011 **Req'd Qty:** 8.00 **Customer:**

Reference:

Run Start

Approvals: **Process Plan:** _____ **Date:** _____ **Tooling:** _____ **Date:** _____

Stop

QC: _____ **Date:** _____ **SPC (Y/N):** _____ **Date:** _____

Sequence ID/ Work Center ID	Operation Description	Set Up/ Run Hours	Tool ID	Tool #	Plan Code	Accept Qty	Reject Qty	Reject Number	Insp. Stamp
130 Brake NC Brake NC	NC BRAKE **Memo** 1-Deburr 2-Form using DT8204 as per Dwg D3405 3- use DT9681 to check if correct forming	0.00 0.00				7	2		Pro →
140 QC Quality Control	QC5- Inspect part completeness to step on W/O **Memo**	0.00 0.00				7			
150 Large Fab Large Fab	Large Fab **Memo** Weld as per Dwg D3405 use DT8484 Identify as D3405-041	0.00 0.00							7

Dart Aerospace Ltd

W/O:		WORK ORDER CHANGES					
DATE	STEP	PROCEDURE CHANGE	By	Date	Qty	Approval Chief Eng / Prod Mgr	Approval QC Inspector

Part No: D3405-241 **PAR #:** _____ **Fault Category:** Small FAB. **NCR:** (Yes) No **DQA:** [illegible] **Date:** 11/07/20

11783 **Resolution:** SCRAP **Disposition:** SCRAP **QA: N/C Closed:** [illegible] **Date:** 11-07-20

NCR: 71583		WORK ORDER NON-CONFORMANCE (NCR)						
DATE	STEP	Description of NC Section A	Corrective Action Section B: Initial Chief Eng	Action Description Chief Eng	Sign & Date	Verification Section C	Approval Chief Eng	Approval QC Inspector
11/7/14	#13	two Qty +2 Parts SCRAP at Bending R.C. operator came back from Lunch AND Forgot that	[illegible]	-2 SCRAP + Destroy no Replace Qty +2	[illegible] 11/07/14	[illegible] 11/07/14	[illegible]	[illegible] 11/7/14
		Heir was A part in the die AND put another part in side Lack of Attention						[illegible] 11/07/14

NOTE: Date & initial all entries

H:\fFORMS\Quality Assurance\approved QA\NCRWO RevE

Work Order ID 71583

Wednesday, July 06, 2011 1:25:10 PM

Item ID: D3405-041 **Accept** **Setup Start**

Revision ID: **Stop**

Item Name: Lug Assembly

Start Date: 7/6/2011 **Start Qty:** 8.00 **Cust Item ID:**

Required Date: 7/20/2011 **Req'd Qty:** 8.00 **Customer:**

Reference:

Run Start

Approvals: **Process Plan:** _____ **Date:** _____ **Tooling:** _____ **Date:** _____

Stop

QC: _____ **Date:** _____ **SPC (Y/N):** _____ **Date:** _____

Sequence ID/ Work Center ID	Operation Description	Set Up/ Run Hours	Tool ID	Tool #	Plan Code	Accept Qty	Reject Qty	Reject Number	Insp. Stamp
160 QC Quality Control	QC9- Inspect visual per QSI004- Fusion Welds **Memo**	0.00 0.00	Cpl 11.07.19						
170 QC Quality Control	QC5- Inspect part completeness to step on W/O **Memo**	0.00 0.00	S 11/07/19			7			
180 Powdercoat Powder Coating	White Gloss(Ref:4.3.5.2) per QSI005 4.3-Steel M117745 **Memo** START TIME: 1:15 OVEN TEMPERATURE: 400° FINISH TIME: 1:45	0.00 0.00				7.	ϕ		11-7-19

Dart Aerospace Ltd

W/O:		WORK ORDER CHANGES					
DATE	STEP	PROCEDURE CHANGE	By	Date	Qty	Approval Chief Eng / Prod Mgr	Approval QC Inspector

Part No: _____ **PAR #:** _____ **Fault Category:** _____ **NCR:** Yes No **DQA:** _____ **Date:** _____

Resolution: _____ **Disposition:** _____ **QA: N/C Closed:** _____ **Date:** _____

NCR:		WORK ORDER NON-CONFORMANCE (NCR)						
DATE	STEP	Description of NC Section A	Corrective Action Section B			Verification Section C	Approval Chief Eng	Approval QC Inspector
			Initial Chief Eng	Action Description Chief Eng	Sign & Date			

NOTE: Date & initial all entries

Work Order ID 71583

Wednesday, July 06, 2011 1:25:10 PM

Item ID: D3405-041 **Accept** **Setup Start** **Stop**

Revision ID:

Item Name: Lug Assembly

Start Date: 7/6/2011 **Start Qty:** 8.00 **Cust Item ID:**

Required Date: 7/20/2011 **Req'd Qty:** 8.00 **Customer:**

Reference:

Run Start **Stop**

Approvals: **Process Plan:** _____ **Date:** _____ **Tooling:** _____ **Date:** _____

QC: _____ **Date:** _____ **SPC (Y/N):** _____ **Date:** _____

Sequence ID/ Work Center ID	Operation Description	Set Up/ Run Hours	Tool ID	Tool #	Plan Code	Accept Qty	Reject Qty	Reject Number	Insp. Stamp
190	QC3- Inspect Part Finish	0.00							
QC	Memo	0.00							
Quality Control									
200	Identify as per dwg & Stock Location: 478	0.00							
Packaging	Memo	0.00							
Packaging									
210	QC21- Final Inspection - Work Order Release	0.00							
QC	Memo	0.00							
Quality Control									

PC 4/7/20 (7)

PC 4/7/20 (7)

11/7/20

mk 11-07-20

Dart Aerospace Ltd

W/O:		WORK ORDER CHANGES					
DATE	STEP	PROCEDURE CHANGE	By	Date	Qty	Approval Chief Eng / Prod Mgr	Approval QC Inspector

Part No: _____ **PAR #:** _____ **Fault Category:** _____ **NCR:** Yes No **DQA:** _____ **Date:** _____

Resolution: _____ **Disposition:** _____ **QA: N/C Closed:** _____ **Date:** _____

NCR:		WORK ORDER NON-CONFORMANCE (NCR)						
DATE	STEP	Description of NC Section A	Corrective Action Section B			Verification Section C	Approval Chief Eng	Approval QC Inspector
			Initial Chief Eng	Action Description Chief Eng	Sign & Date			

NOTE: Date & initial all entries

H:\fFORMS\Quality Assurance\approved QA\NCRWO RevE

Picklist Print

Wednesday, July 06, 2011 1:25:08 PM

Work Order ID: 71583

Parent Item: D3405-041

Parent Item Name: Lug Assembly

Start Date: 7/6/2011 **Required Date:** 7/20/2011

Start Qty: 8.00 **Required Qty:** 8.00

Comments: IPP A□05.09.01□New issue□KJ/JLM□
IPP B 09.01.28 rev.B drawing EC verified by:DD

Component Item ID/ Item Name	Replacement Item ID	Mfg/ Purch	Bin Item	Primary Location	Last Location	Route Seq ID	Unit of Measure	Qty on Hand	Qty per Kit	Total Qty	Qty Issued	Date Issued	Status
D3404-1		Manufactured	No			100	Each	11.0000	1	8			
GHW Lug										EL 11-7-19			
				Location			**Loc Qty**		**Loc Code**				
				WA			8						
	70664 x 7				69883		8				Not in my stock.		
				WA030			3						
					67127		3			3	*		
M304S11GA		Purchased	No			150	sf	102.0000	0.154	1.296842	1.5		
304/316 0.125 Sheet										HB11-7-13			
				Location			**Loc Qty**		**Loc Code**				
				MAT020			102						
					117494		102			117494			

9

Dart Aerospace Ltd

W/O:		WORK ORDER CHANGES					
DATE	STEP	PROCEDURE CHANGE	By	Date	Qty	Approval Chief Eng / Prod Mgr	Approval QC Inspector

Part No: _____ **PAR #:** _____ **Fault Category:** _____ **NCR:** Yes No **DQA:** _____ **Date:** _____

Resolution: _____ **Disposition:** _____ **QA: N/C Closed:** _____ **Date:** _____

NCR:		WORK ORDER NON-CONFORMANCE (NCR)						
DATE	STEP	Description of NC Section A	Corrective Action Section B			Verification Section C	Approval Chief Eng	Approval QC Inspector
			Initial Chief Eng	Action Description Chief Eng	Sign & Date			

NOTE: Date & initial all entries

H:\fFORMS\Quality Assurance\approved QA\NCRWO RevE

DART AEROSPACE LTD	Work Order:	71583
Description: GHW Lug	Part Number:	D3405-1
Inspection Dwg: D3405 **Rev:** B		Page 1 of 1

FIRST ARTICLE INSPECTION CHECKLIST

[X] First Article [ ] Prototype

Drawing Dimension	Tolerance	Actual Dimension	Accept	Reject	Method of Inspection	Comments
Ø0.438	+0.006/-0.001	.439	2		V IBOZ	
1.50	+/-0.030	1.517	8		V	
1.750	+/-0.010	1.751	8		V	
6.751	+/-0.010	6.751	8		V	
8.00	+/-0.030	7.995	8		V	
0.125	+/-0.010	.117	8		V	

Measured by:	B	Audited by:	8	Prototype Approval:	N/A
Date:	11-7-13	Date:	11/07/13	Date:	N/A

Rev	Date	Change	Revised by	Approved
A	08.11.28	New Issue P/O D3405-041	KJ/EC	
B	09.05.04	Dimensions update per Dwg Rev. B	KJ/DD	

ITEM No.	QTY. -041	QTY. -043	PART NUMBER	DESCRIPTION
1	X		D3405-041	LUG ASSEMBLY
2		X	D3405-043	LUG ASSEMBLY
11	1	1	D3404-1	GHW LUG
12	1		D3405-1	GHW BRACKET
13		1	D3405-3	GHW BRACKET

B

SHOP COPY
RETURN TO
ENGINEERING
UNCONTROLLED COPY
SUBJECT TO AMENDMENT
WITHOUT NOTICE
WORK ORDER
NO. 71583
CL 11/07/06

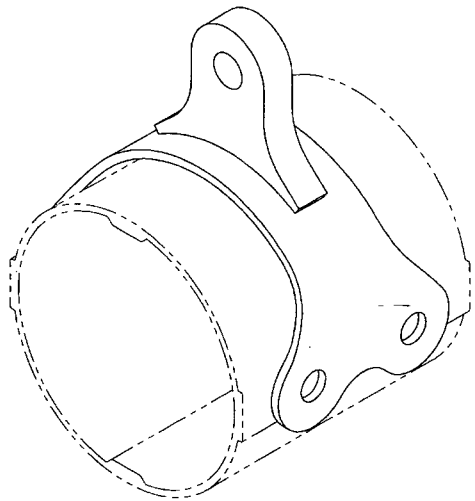

D3405-041 LUG ASSEMBLY
(SKID TUBE SECTION SHOWN
FOR REF ONLY)

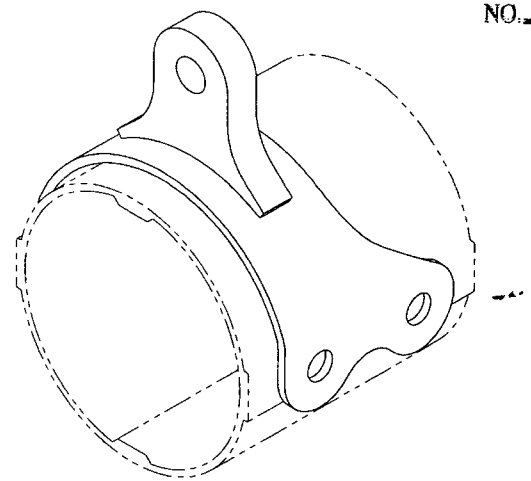

D3405-043 LUG ASSEMBLY
(SKID TUBE SECTION SHOWN
FOR REF ONLY)

RELEASED
08/12/18 NP

NOTES:
1) MATERIAL: N/A
2) FINISH: POWDER COAT ASSEMBLY WHITE (4.3.5.2) PER DART QSI 005 4.3
3) TOLERANCES: PER DART QSI 018 UNLESS OTHERWISE NOTED
4) UNITS: INCHES UNLESS OTHERWISE NOTED
5) BREAK SHARP EDGES: 0.005 TO 0.010 MAX
6) IDENTIFICATION: IDENTIFY WITH DART P/N "D3405-041" USING FINE POINT PERMANENT INK MARKER
: IDENTIFY WITH DART P/N "D3405-043" USING FINE POINT PERMANENT INK MARKER
7) WEIGHT: -041, 0.85 lbs
-043, 0.87 lbs

REV.	DESCRIPTION	BY	DATE
B	DRAWING REDRAWN IN SOLIDWORKS WITH CURRENT STANDARDS AND TRANSFERED TO "B" SIZE BORDER. FLAT PATTERNS FOR -1 & -3 INCREASED IN LENGTH TO PREVENT FOULING AT INSTL (SEE PAR198). SHEETS 3 & 4 ZONE A6 4.120 DIM WAS 4.100.	AJS	08.09.19
A	NEW ISSUE	PH	05.03.08

DESIGN	PH	DART AEROSPACE LTD HAWKESBURY, ONTARIO, CANADA
DRAWN	AJS	
CHECKED		DRAWING NO. D3405 — REV. B — SHEET 1 OF 4
MFG. APPR.		
APPROVED		TITLE: GHW LUG ASSEMBLY — SCALE: NTS
DE APPR.		
DATE	08.09.19	

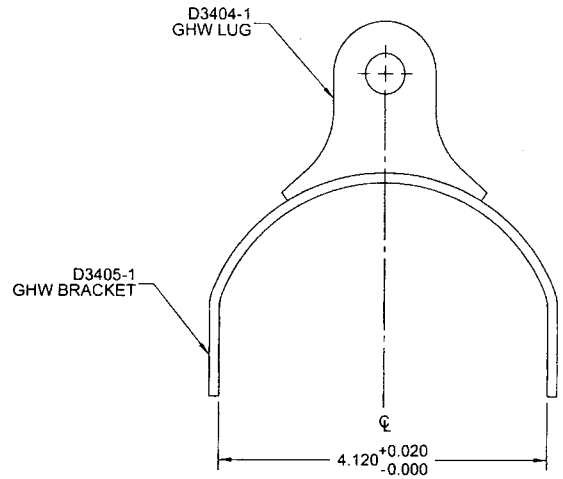

D3405-041 LUG ASSEMBLY

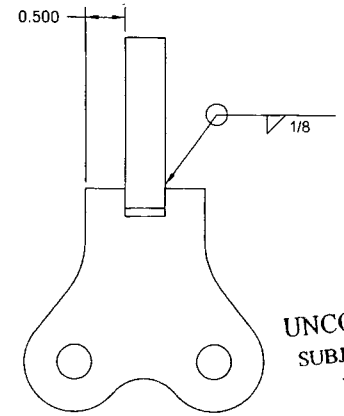

SHOP COPY
RETURN TO
ENGINEERING
UNCONTROLLED COPY
SUBJECT TO AMENDMENT
WITHOUT NOTICE
WORK ORDER
NO. 71583

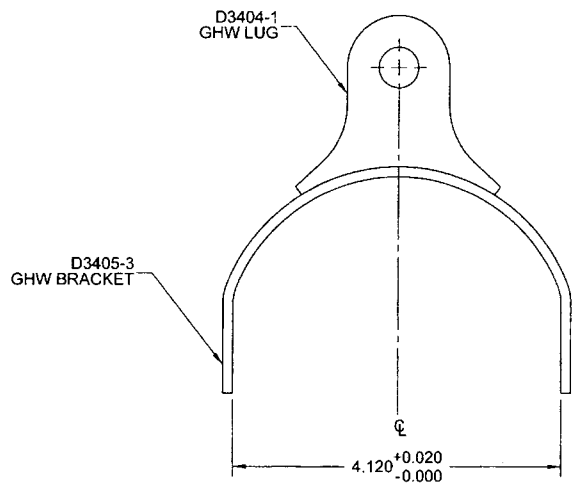

D3405-043 LUG ASSEMBLY

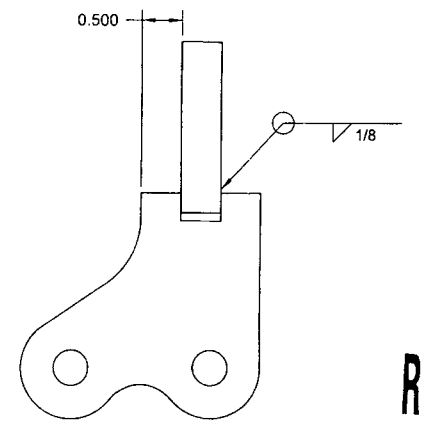

RELEASED
06/12/18

DESIGN	PH	**DART AEROSPACE LTD** HAWKESBURY, ONTARIO, CANADA
DRAWN	AJS	
CHECKED		DRAWING NO. D3405 — SHEET — R
MFG. APPR.		
APPROVED		TITLE
DE APPR.		GHW LUG ASSEMBLY
DATE	08.09.19	

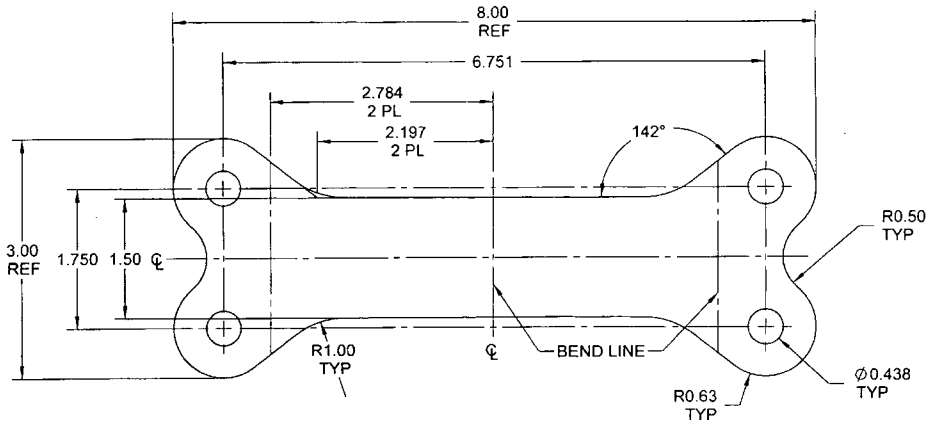

D3405-1F GHW BRACKET FLAT PATTERN

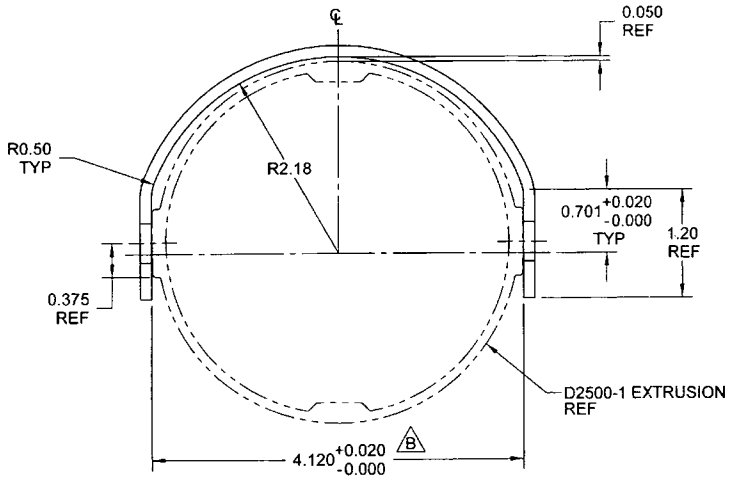

D3405-1 GHW BRACKET
(MAKE FROM D3405-1F)

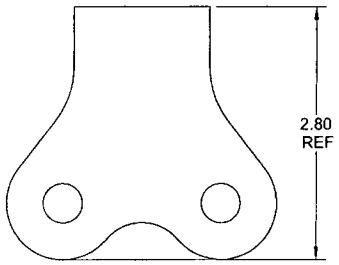

SIDE VIEW FOR REF ONLY

SHOP COPY
RETURN TO
ENGINEERING
UNCONTROLLED C Y
SUBJECT TO AMENDM NT
WITHOUT NOTICE
WORK ORDER
NO. 71583

RELEASED
08/12/19

NOTES:
1) MATERIAL: AISI 304/316 STAINLESS STEEL SHEET, 11 GAUGE (0.125 THICK)
PER MIL-S-5059 (ANNEALED) 2B FINISH OR AMS 5513/5524
REF. DART SPEC. M304S11GA
2) FINISH: N/A
3) TOLERANCES: PER DART QSI 018 UNLESS OTHERWISE NOTED
4) UNITS: INCHES UNLESS OTHERWISE NOTED
5) BREAK SHARP EDGES: 0.005 TO 0.010 MAX
6) IDENTIFICATION: N/A
7) WEIGHT: N/A

DESIGN	PH	**DART AEROSPACE LTD** HAWKESBURY, ONTARIO, CANADA
DRAWN	AJS	
CHECKED		DRAWING NO. D3405 — REV. B — SHEET 3 OF 4
MFG. APPR.		
APPROVED		TITLE: GHW LUG ASSEMBLY — SCALE: NTS
DE APPR.		
DATE	08.09.19	

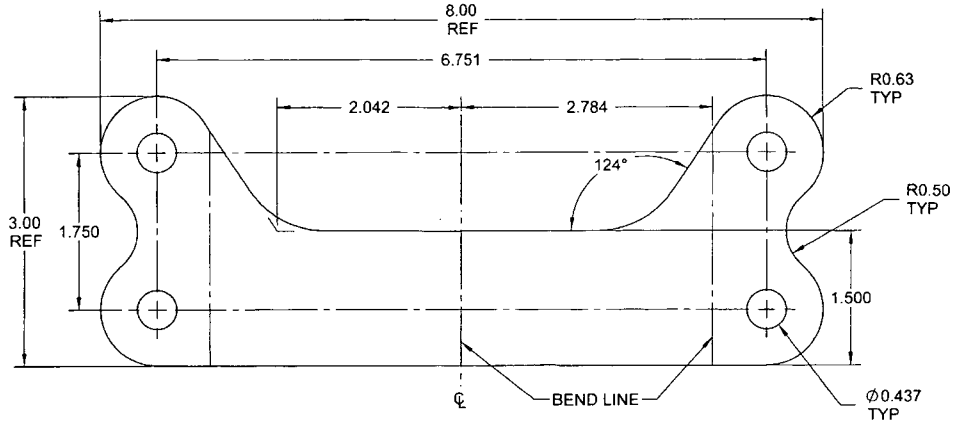

D3405-3F GHW BRACKET FLAT PATTERN

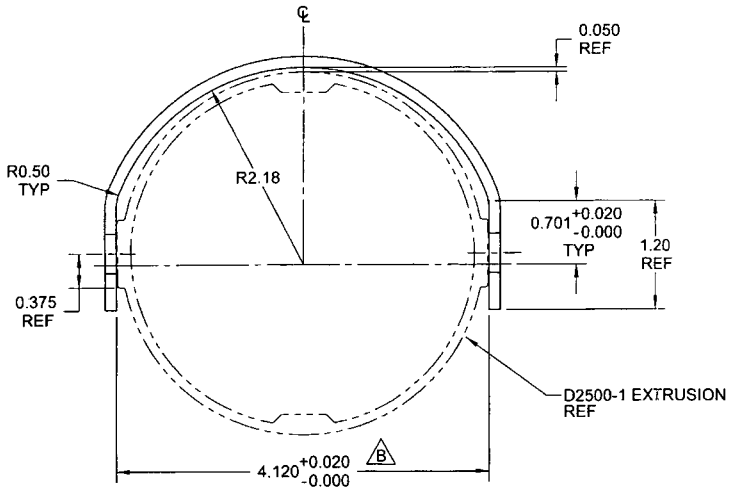

D3405-3 GHW BRACKET
(MAKE FROM D3405-3F)

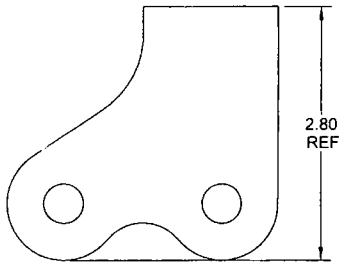

SIDE VIEW FOR REF ONLY

SUBJECT TO AMENDMENT WITHOUT NOTICE
WORK ORDER
NO. 71583

WORK ORDER
NO.

RELEASED
08/12/19 NW

NOTES:
1) MATERIAL: AISI 304/316 STAINLESS STEEL SHEET, 11 GAUGE (0.125 THICK)
PER MIL-S-5059 (ANNEALED) 2B FINISH OR AMS 5513/5524
REF. DART SPEC. M304S11GA
2) FINISH: N/A
3) TOLERANCES: PER DART QSI 018 UNLESS OTHERWISE NOTED
4) UNITS: INCHES UNLESS OTHERWISE NOTED
5) BREAK SHARP EDGES: 0.005 TO 0.010 MAX
6) IDENTIFICATION: N/A
7) WEIGHT: N/A

DESIGN	PH	**DART AEROSPACE LTD** HAWKESBURY, ONTARIO, CANADA
DRAWN	AJS	
CHECKED		DRAWING NO. D3405 — REV. B — SHEET 4 OF 4
MFG. APPR.		
APPROVED		TITLE: GHW LUG ASSEMBLY — SCALE: NTS
DE APPR.		
DATE	08.09.19	